P Series

Pocket Thermal Camera

User Manual V1.0.0

IRay Technology Co., Ltd.

www.infiray.com

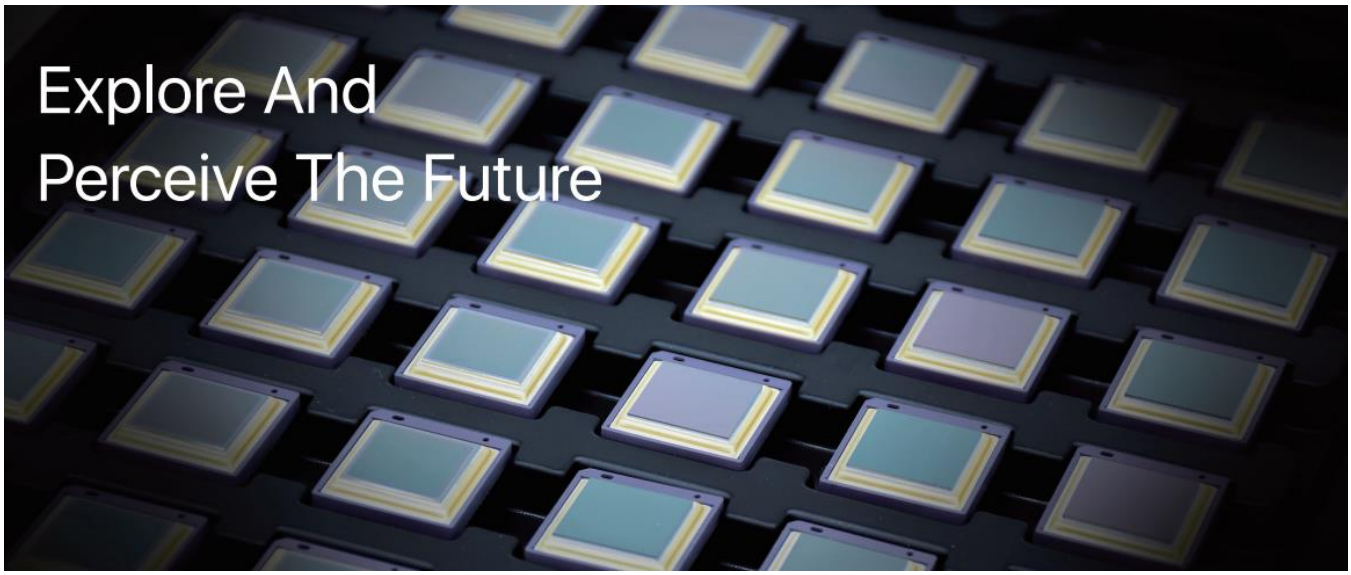

Introduction to IRay Technology

IRay Technology Co., Ltd. concentrates on developing infrared thermal imaging technologies and manufacturing relevant products, with completely independent intellectual property rights. IRay is committed to providing global customers with professional and competitive infrared thermal imaging products and solutions. The main products include IRFPA detectors, thermal imaging modules, and terminal thermal imaging products.

With R&D personnel accounts for 48% of all employees, 662 intellectual property projects in terms of IRay have been authorized and accepted: 522 patented technologies authorized and accepted in China (including those for integrated circuit chips, MEMS sensors design and manufacture, Matrix III image algorithms and intelligent precise temperature measurement algorithms, etc.); 16 patented technologies authorized and accepted overseas; 86 software copyrights; and 38 integrated circuit layout designs.（The statistic data is up to April,2021）

IRay products have been applied in various fields, including epidemic prevention and control, industrial thermography, security and fire control, night vision observation, automatic driving, Internet of Things, AI, and machine vision.

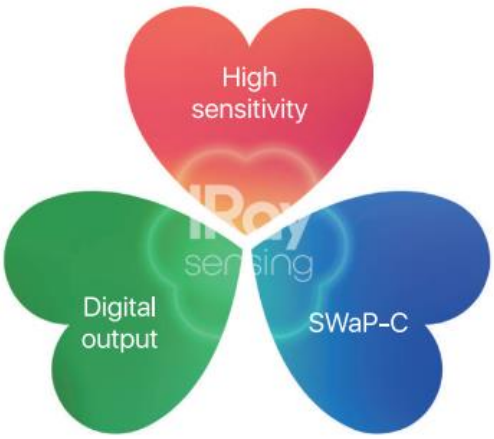

Historical Version

Version	Data	Comments
V1.0.0	2021-04	Initial release

Table of Contents

1.Notice to Users

1.1 Manual Updates

Our manuals are updated several times per year. Please contact us to get the latest manuals.

1.2 Scope of Application

This manual is applicable to all models in P-Series, which means that some functions described in this manual may not be applicable to a specific model.

2.Quick Start Guide

2.1 Packaging

Thermal camera, adapter, lanyard, portable bag and cable.

2.2 Steps for Quick Start

Follow the following steps：
1.Charging Use a USB cable to charge the camera with voltage DC 5V.
2.Power on and off Long press the power button ⏻ to turn on/off the camera, and short press the power button ⏻ to sleep/wake up.
3.Find the target Point the thermal camera at the object of interest.
4.Capture image Click the photo button to capture the image.
5.PC analysis Install and run the client software on the PC, and use the USB cable to connect the camera to the PC to perform secondary analysis.

3.Overview of Thermal Camera and Application

The black design with the frosted texture offers a handy sense of comfort. The flexible rotating optical block can meet the requirements of special spaces for more convenient and comfortable shooting. The automatically rotated touch screen can display the menu cyclically, which is like experiencing a mobile game. With power-saving screen and humanized industrial design, the thermal camera is durable and reliable during work. It is also featured with dustproof, waterproof, anti-falling, and supports cloud uploading of data, convenient and efficient.

3.1 Camera Appearance

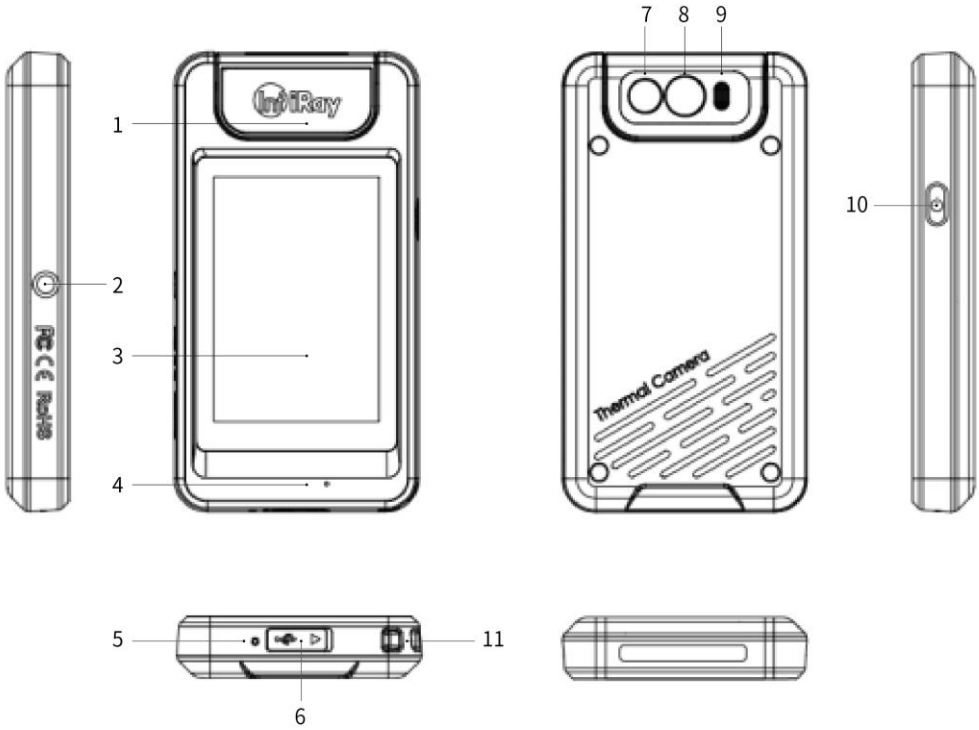

No.	Explanation	No.	Explanation
1	Lens rotation module	7	Digital camera
2	Tripod mount	8	Infrared lens
3	Touch screen	9	LED lights
4	Microphone	10	On/off button
5	Power indicator	11	Lanyard attachment point
6	USB-C connector		

3.2 Rotating Optical Block

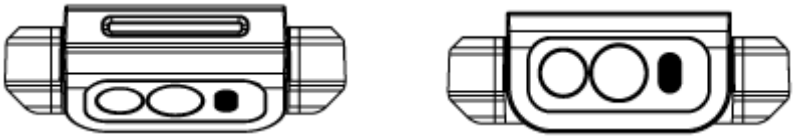

The lens module can be rotated at angles of 0°, 30°, 60° and 90°. Please do not rotate more than 90° to avoid damage to the camera.

3.3 User Interface

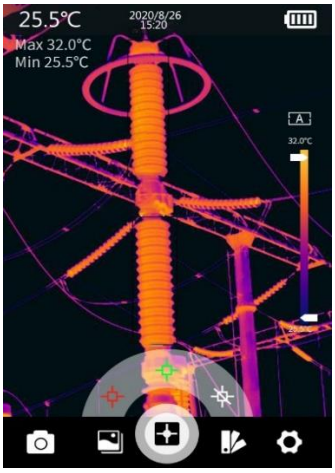

The screen displays temperature, power, date&time, temperature bar and the main menu below the main interface. The main menu includes five functions: photo viewing, image mode, temperature measurement tool, color palette, and setting. The fan-shaped menu displays the secondary menu in the central of the main menu.

3.4 Applications

The P series thermal camera is portable in pockets without affecting the daily work of engineers. Fuse overheating, air leakage, pipe blockage and other problems can be found during work at any time. Once potential risks are found, data can be collected, uploaded, shared and countermeasures can be taken in time to prevent problems before they occur, which is convenient and efficient. The application of P series pocket thermal cameras is not only limited to inspectors, but also engineers and technicians in various fields such as electrical maintenance, pipeline inspection, property maintenance, HVAC, roof water leakage inspection, architects, etc.

3.4.1 Equipment Detecting in Narrow Space

P series pocket thermal camera is compact with 90° rotating lens, which make it applicable for equipment failure detection in all kind of narrow space, so there is no need to move the equipment while capturing a clear infrared image.

3.4.2 Automobile Maintenance

The high temperature of automobile vent-pipe indicates inadequate fuel burning, high compression ratio and poor thermal insulation properties of the return line, which have impact on the operation of engine system, shaft bearing system of the automotive chassis, electrical equipment and the car body comfort. P series pocket thermal camera can detect the abnormal temperature of the automobile parts and can be applied in all kinds of automobile maintenance scenes besides vent-pipe detections.

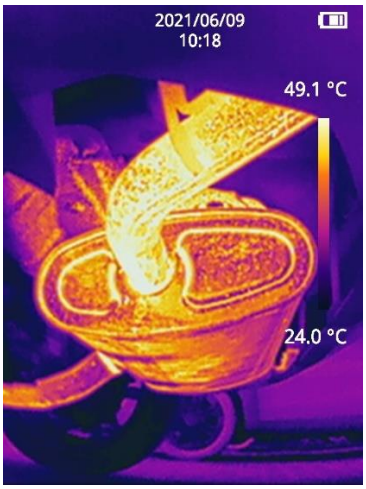

3.4.3 Damp Wall Detections

The leak of water supply pipeline, drain pipe or heating pipe can lead to wall dampness, and even worse wall mildew. P series pocket thermal camera can detect the wall dampness which is invisible for the human eyes and assist in locating the leak position.

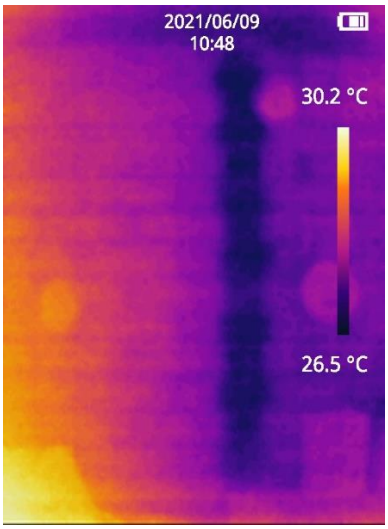

3.4.4 Detection of Air Conditioner Vent

Air conditioners are widely used in shopping malls and office buildings. The P series pocket thermal camera can quickly detect the operation condition of the air conditioner vent. There is no need to climb high to judge whether the air conditioner is in normal use.

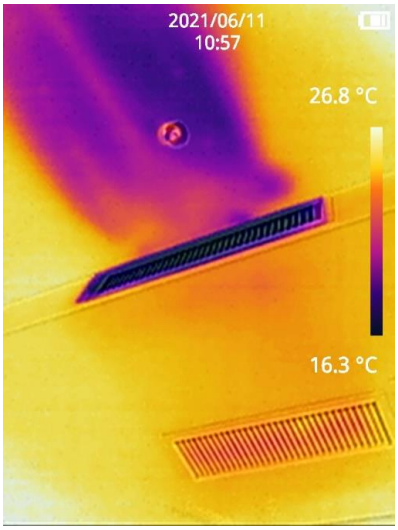

4.How to Get High-quality Images

For thermal cameras, the image quality is by no means limited to the resolution. The function of the image is to record information of target details, colors, temperature OSD, acquisition date, acquisition time, etc. Different application will have different requirements for imaging, so choosing the right shooting distance, image mode, color palette, magnification, temperature width, and fill light is also crucial for obtaining high-quality images.

4.1 Image Mode

The P series thermal cameras can capture infrared images and visible light images at the same time. Four different images can be displayed on the screen by selecting the image mode function: thermal imaging, dual-light fusion, picture-in-picture and visible light. Each image mode has a different emphasis on displaying information for different applications. The details are as follows:

Illustrations	Introduction
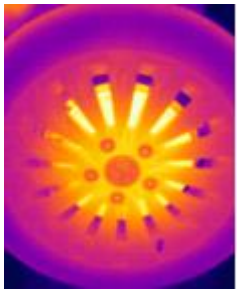	1.Thermal imaging: the infrared image records the heat distribution on the surface of the object, which is not limited by the visible light environment. It makes up the information blind area of the visible light image and plays a vital role in night vision and temperature analysis. In this mode, the +,- icons in the lower left corner of the main interface can adjust the magnification of the image so as to achieve the best effect of the target screen ratio.
	2.visible and infrared fusion images. The infrared image records abundant temperature information of the target, but its resolution is lower than that of the visible image, especially for the tightly packed target group. Due to the heat transfer effect, the infrared image can not record the sharp outline details of the target as the visible image as a result. The dual-light fusion mode combines the advantages of infrared and visible light, and can record abundant temperature information and outline details at the same time. Even the infrared light and visible light can be fused to a certain scale. Operation: in this mode, the +, - icons in the lower left corner of the main interface can adjust the fusion ratio.

	3.PIP: visible light and infrared overlay image. Because of the heat transfer effect, the infrared image can not distinguish the details of objects closely arranged in one dimension, such as multiple heating pipes, so it is difficult to identify the pipes. The picture-in-picture mode can solve this problem very well by overlaying the infrared image on the visible light image, and the overlaid position can be adjusted by the dual-light alignment function.
	4.Visible Light: full color image in visible light. The light compensation design can adapt to the low light environment. The electronic zoom function can be used to capture the details of a long-distance target. The lower-left +,- icon of the main interface can adjust the image magnification, so that the target proportion of the screen can achieve the best results.

4.2 Color Palette

Human eyes can only distinguish twenty gray levels. Although the gray level of collected infrared image can be up to thousands of gray levels, it is a pity that the human ability to distinguish gray level is limited, and information loss is dozens of times. However, the human visual sense of color resolution is strong enough to distinguish thousands of colors. Therefore, the image with color palette is more distinguishable and detailed than the gray image.

The three image modes of infrared, dual-light fusion and picture-in-picture are related to the temperature. Different temperatures can show different colors, and it is easier to analyze the image by choosing the right color palette which includes black heat, white heat, iron red, lava, rainbow, rainbow HC, and black red. The color palette can be set through the menu.

4.3 Electronic Zoom

The size of the target object in the image is related to the shooting distance. The shorter the distance, the smaller the object, which will make it impossible to see the details of the object; the shorter the distance, the larger the object, which will make the image unable to fully accommodate the object; Therefore, the appropriate screen ratio of the target is also an important factor affecting the image quality. Adjusting the distance allows the target to be the right size in the image. However, the distance from the target to the thermal camera will be limited in many cases, such as high-altitude targets. At this time, the electronic zoom function will become particularly important. In infrared mode and visible light mode, the ratio of

target to screen can be adjusted by electronic zoom function, and the +,- icons in the lower left corner of the main interface in each mode can adjust the magnification of the image, so that the ratio of target to screen can achieve the best effect.

4.4 Alignment Distance

For better dual-light image effects, you need to set the alignment distance separately, that is, the approximate distance from the thermal camera to the object when using dual-light fusion, picture-in-picture modes. Operation steps: after entering any of the two image modes of dual-light fusion, and picture-in-picture, the +,- icons appear on the main interface, and the distance parameters can be set. The distance range is 0.5m-4m, and the adjustment accuracy is 0.5m. When the adjustment is finished, touch the screen to hide the icon.

4.5 Temperature Scale Adjustment

The temperature range adjustment refers to the adjustment of the upper and lower temperature limits. The gray value of the image in the thermal image is related to the temperature. If the temperature range is fixed and cannot be adjusted, the thermal camera cannot adapt to various scenes with changing temperature. Adjusting the temperature range can change the gray value distribution in the image and present a better image. The temperature range adjustment of the thermal camera has two types: automatic and manual:

Temperature Scale Mode	Introduction
Auto Mode	In automatic mode, the thermal camera continuously adjusts the upper and lower temperature limits according to the highest temperature and the lowest temperature in the entire screen, and presents the best image in real time.
Manual Mode	In manual mode, you can drag the movable temperature scales to adjust the upper and lower limits of the temperature. The global best effect of the image in a specific scene may not be able to meet the demand, so the temperature range is set near a specific target temperature through the manual temperature range function, thereby shielding insignificant objects in the image, and making it easier to focus on the details of the target.

Notes: Only Auto Temperature scale Mode is available for P200.

4.6 Fill Light

In case of applying visible light mode in dark scenes, fill light is needed to achieve the ideal image effect. The secondary menu icon or icon in the main menu can set the turn-on and turn-off of fill light, which can also be used for lighting.

5.Measuring Temperature

Besides capturing high-quality images, the thermal camera also has another characteristic function, that is, temperature measurement. How to measure temperature accurately? To obtain accurate temperature, it is not enough to have high-performance detectors and stable hardware components only, correct methods are also required. The main factors that influence the result of temperature measurement are emissivity, ambient temperature, distance, temperature measurement range, unit selection, and so on. Therefore, before using the camera for measuring temperature, be sure to set the temperature measurement parameters. In addition, in order to obtain accurate temperature efficiently, suitable temperature measuring tools should be selected for different target objects.

5.1 Set Measuring Parameters

5.1.1 Set Emissivity

Emissivity refers to the ratio of the radiant power of an object to the radiant power of a black body at the same temperature, which is relative to the reflectivity of the object. At the same target temperature, higher target emissivity means that the target can radiate a higher proportion of energy. For example, the emissivity of body skin is 0.98, and the emissivity of printed circuit boards is 0.91. For more information on emissivity, please refer to the attached common emissivity table or search from other channels. In order to obtain more accurate measurement results, it is necessary to set the corresponding emissivity according to the target to be measured before each measurement. For specific operation steps, please refer to chapter 8.1.

5.1.2 Set Ambient Temperature

The ambient temperature is an important factor that affects the temperature measurement of the thermal camera. Before measuring the temperature, it’s necessary to set this parameter in advance. For the specific operation steps, see 8.1 Measurement Parameters.

5.1.3 Set Distance

Infrared rays will be attenuated in the atmosphere. In the process of temperature measurement, the

distance between the target and the thermal camera will have different effects on the measurement results. The farther the distance, the lower the temperature. In order to ensure the accuracy of the temperature measurement, the thermal camera will compensate the result according to the distance of the object. Therefore, be sure to set the appropriate distance before temperature measurement. Refer to chapter 8.1 for detailed operation steps.

5.1.4 Set Measuring Gear

The temperature measurement range of the camera is -20～550℃. In order to ensure the imaging effect, the temperature measurement range is divided into -20～150℃ and 100～550℃. The user can independently select different temperature measurement ranges according to the conditions of use. For specific operation steps, please refer to chapter 8.2.

5.1.5 Set Units

The temperature unit supports three display modes: Celsius, Fahrenheit, and Kelvin. The default distance unit is meters. For specific operation steps, please refer to chapter 8.9.4.

5.2 Choose Measurement Tools

Different measurement tools should be chosen for different scenarios because choosing a suitable measurement tool can improve your work efficiency. Click the icon in the main menu, the fan-shaped sub menu will be displayed, which contains six icons of temperature measurement tools: center spot, the min. temperature, the max. temperature, spot, line and region.

5.2.1 Center Spot Measurement

The measuring result will be displayed on the top left corner of the screen when the center spot measurement is chosen. You can turn on or turn off center spot measurement by clicking the icon in the sub menu.

5.2.2 Cold Spot Tracking

The min. temperature of the whole frame will be displayed on the top left corner of the screen when the cold spot tracking is chosen. You can turn on or turn off the cold spot tracking by clicking the icon in the sub menu.

5.2.3 Hot Spot Tracking

The max. temperature of the whole frame will be displayed on the top left corner of the screen when the hot spot tracking is chosen. You can turn on or turn off the hot spot tracking by clicking the icon in the sub menu.

5.2.4 Custom Spot Measurement

The measurement results will be displayed on the screen following the custom spot while custom spot measurement is chosen.

Function	Introduction
Set	Click the icon in the sub menu of the measurement tools, then click anywhere on the screen to set the custom spot, repeat to set the next measuring spot, at most 10 custom spots can be set.
Move	You can move the custom spot to anywhere you want by mouse dragging.
Remove	Click any custom spot, the spot will display in bold, and at the same time two icon buttons will appear on the top left corner of the screen: remove ,remove all , click to remove single custom spot or remove all custom spots respectively.

5.2.5 Custom Line

The max. temperature will display on the screen following the custom line while custom line measurement is chosen.

Function	Introduction
Set	Click the icon in the sub menu of the measurement tools, then click and dray anywhere on the screen to set the custom line, repeat to set the next measuring line, at most 10 custom lines can be set.

Function	Introduction
Edit and Move	By clicking the line center you can drag the line to other positions. By clicking the end of line, you can extend the measurement line or change its direction.
Remove	Click any custom line, the line will display in bold, and at the same time two icon buttons will appear on the top left corner of the screen: remove ,remove all , click to remove single custom line or remove all custom lines respectively.

5.2.6 Custom region

The max. temperature, min. temperature and AVG temperature will display on the screen following the custom region while custom region measurement is chosen.

Function	Introduction
Set	Click the icon in the sub menu of the measurement tools, then click and dray anywhere on the screen to set the custom region, repeat to set the next measuring region, at most 10 custom regions can be set.
Edit and Move	By clicking the region center or border, you can drag the region to other positions. By clicking the end of region and then drag, you can change the size and shape of the measurement region.
Remove	Click any custom line, the line will display in bold, and at the same time two icon buttons will appear on the top left corner of the screen: remove ,remove all , click to remove single custom region or remove all custom regions respectively.

6.How to Do Effective Data Management

An excellent thermal camera can not only acquire high quality images but manage data effectively. The data management includes data acquisition, naming, annotation, saving, classification, upload, query, deleting, etc. This thermal camera integrates several data management advantages such as flexible acquisition function, multiple saving mode, enough storage space, stable data transmission, which will ensure perfect user experience.

6.1 Data Acquisition and Saving

P series thermal camera will generate .ipg and .irg files for each image capture. The data saving mode for manual image capture, timed image capture and auto alarm image capture is the same, which is applicable for second analysis. The default image naming rules: month/day/hour/minute/second of the image capture.

6.1.1 Manual Acquisition

Call up the secondary fan-shaped menu by clicking the icon in the main menu via touch screen, then click the image capture icon , click anywhere on the touch screen to hide and quit the menu bar.

6.1.2 Auto Image Capture

The camera supports timed image capture, you can set the time interval an d number of captured image, the unit of time interval is sec, the range is 10-3600, the range for the number of captured image is 10-1000. If this function is enabled, the image will be captured according the preset time interval and stop capturing after the number limit and at the same time this function will be disabled, refer to 8.6 for detailed operation procedures.

While auto image capture is enabled, you can mount the camera to the tripod to ensure the scene consistency. Please do not perform other operations during auto image capture process, you can tap the touch screen to call up the quit button and disable the auto image capture function by clicking.

6.1.3 Save Data

The data should be given annotation, renamed and saved. There are two kinds of data saving modes: manual saving and auto saving.

Function	Introduction
Manual Saving	The save interface will pop up after snapshot or image capture. The default file name(month/day/hour/minute/second) and four icon buttons (save , annotation, QR code, back) will be displayed on the interface. You can rename files, add voice notes or add QR code annotation, then click the save button to save or cancel by clicking back button.
Auto Saving	While this function is enabled, the saving interface will not pop up after image capture. The image will be saved automatically, the file name is

Function	Introduction
	month/day/hour/minute/second by default. The data saving mode is auto under auto image capture mode. See chapter 8.6 for detailed operation procedures.

6.2 Gallery Search and Data Upload

Call up the secondary fan-shaped menu by clicking the icon button on the main interface, click gallery search icon to enter gallery interface, the gallery interface includes image thumbnail, back, upload, delete, check button icons and scroll bar on the right.

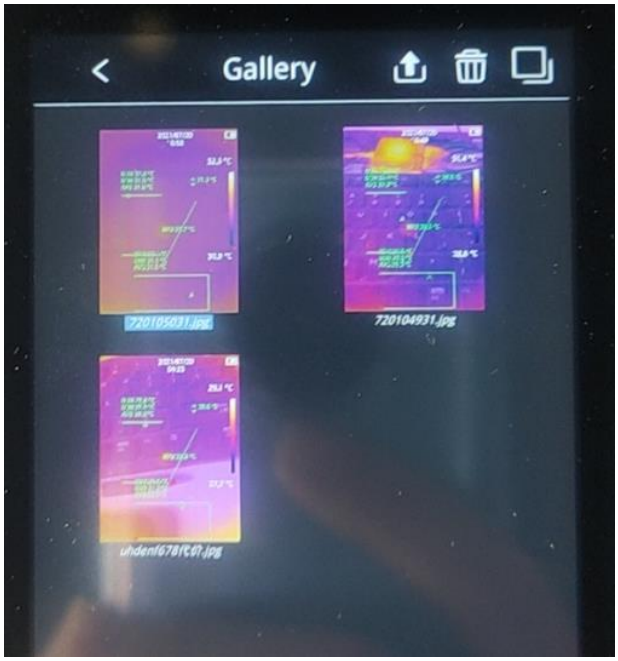

Click any image to open image preview interface, the image preview interface includes such button icons such as back, last, next, delete and edit. Click edit button to enter into edit interface where you can rename the files.

Tick the check box and click several images to select the images, then click upload and delete button to perform batch upload and delete.

7.Alarm

P series can not only get accurate temperature data but achieve smart alarm function compared with other ordinary thermal cameras. Smart alarm can not only detect alarm event automatically but give prompt message and collect data. The alarm functions of P series can automatically select temperature information on the screen, detect abnormal temperature, give prompt alarm and collect data automatically, which is easy, fast, effective and exhaustive compared with human eye detections.

7.1 Alarm Settings

The camera supports above-temperature alarm and below-temperature alarm, the setting path: set-above/below temperature alarm, the user can set above-temperature alarm threshold, below-temperature alarm threshold. To turn on or turn off the alarm function via on/off button. The following icons will appear after the above-temperature alarm or below-temperature alarm is triggered.

7.2 Alarm Linkage

Alarm linkage means prompt message, data collection, prevention measures (such as fire control linkage). The warning box in one type of alarm linkage.

Besides warning box, alarm image capture can collect the related temperature information for secondary analysis.

Set path: setting-above/below temperature alarm, alarm image capture can also be turned on or turned off in this interface, the time interval and the number of captured image can be set. When this function is enabled, the image will be captured according to the preset time interval after the above/below temperature alarm is triggered. The image capture will be ended after the number of captured image is up to preset limit and this function will be disabled automatically. You should enable this function again when you use next time.

8.Camera Settings and Maintenance

8.1 Thermographic Parameters

To enter into the setting interface by clicking the icon button in the main interface via touch screen, then click the “thermographic parameters setting” to perform parameter settings, click save to quit.

8.2 Gain Switch

To enter into the setting interface by clicking the icon button in the main interface via touch screen then click the “gain switch” to perform gain switch settings, click save to quit.

8.3 Above/Below-Temperature Alarm

To enter into the setting interface by clicking the icon button in the main interface via touch screen then click the “above/below temperature alarm” to perform on/off settings, temperature value setting, and auto alarm image capture, click save to quit.

8.4 Cloud Service

To enter into the setting interface by clicking the icon button in the main interface via touch screen then click the “cloud service” to enter into platform account login interface, type in user name and password and device name to perform login. Please check Internet connection if “server connection error” appears. You need to register via temp.iraytek.com for the first use because the hand-held cameras can not be registered.

8.5 Wi-Fi Settings

To enter into the setting interface by clicking the icon button in the main interface via touch screen, then click the “Wi-Fi setting” to enter into hotspot and Wi-Fi setting interface.

8.6 Image Capture Settings

To enter into the setting interface by clicking the icon button in the main interface via touch screen, then click the “image capture setting” to turn on or turn off the function of auto image save and timed image capture. You can set time interval and the number of captured image for timed image capture.

8.7 Auto Power Off

To enter into the setting interface by clicking the icon button in the main interface via touch screen, four modes can ben selected:5 minutes, 10 minutes, 20 minutes and off.

8.8 Screen Rotation Setting

To enter into the setting interface by clicking the icon button in the main interface via touch screen, then click the “screen rotation setting” to enter into screen rotation setting interface where you can choose auto rotation or manual rotation. Two modes are optional in manual rotation mode: landscape and portrait.

8.9 System Settings

To enter into the setting interface by clicking the icon button in the main interface via touch screen, click “system settings” to enter into system settings interface which includes 8 kinds of secondary setting items.

8.9.1 Device Information

You can view device model, version information, storage capacity and remaining storage capacity.

8.9.2 Date/Time

The device time (including year/month/day/hour/minute/second) is shown on date/time interface.

8.9.3 Language

You can select the language.

8.9.4 Unit

You can set the temperature unit and distance unit. The temperature unit includes Celsius, Fahrenheit and Kelvin, the distance is in meter.

8.9.5 Screen Brightness

Three levels can be selected: high, medium and low.

8.9.6 Format SD Card

You can perform the operation of formatting the SD card.

8.9.7 USB Mode

USB flash disk and USB camera can be chosen in USB mode settings interface. The USB flash disk should be chosen if the thermal camera is connecting with PC software for secondary analysis. The USB camera should be chosen if the thermal camera is connecting with the PC software for live image preview.

8.9.8 Restore Factory Defaults

The camera can be restored to factory defaults in case of choppy image and other abnormal situations.

8.9.9 Device Upgrade

The thermal camera can be updated via SD card.

9.Product Drawings

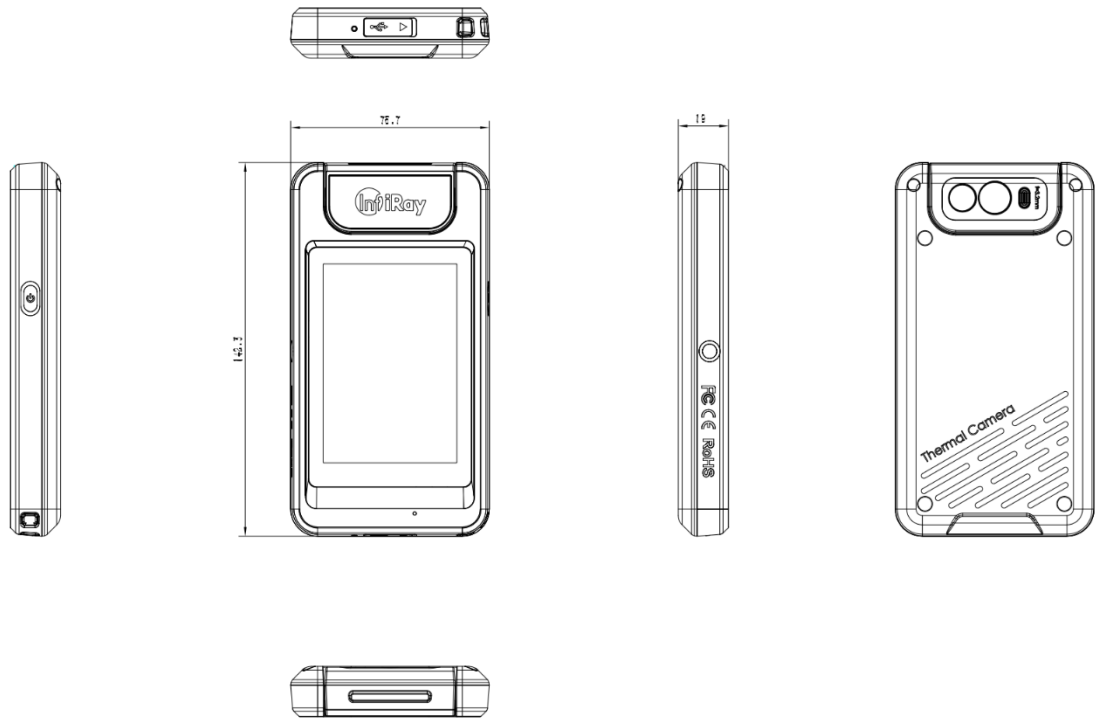

10.Cleaning the camera

10.1Camera housing, cables, and other items

Camera housing, cables, and other items	
Liquids	Use one of these liquids: 1. Warm water 2. A weak detergent solution
Equipment	A soft cloth
Procedure	Follow this procedure: 1.Soak the cloth in the liquid. 2.Twist the cloth to remove excess liquid. 3.Clean the part with the cloth.

Caution
Do not apply solvents or similar liquids to the camera, the cables, or other items. This can cause damage.

10.2 Infrared lens

Infrared lens	
Liquids	Use one of these liquids: 1.A commercial lens cleaning liquid with more than 30% isopropyl alcohol. 2. 96% ethyl alcohol（C_2H_5OH）
Equipment	cotton wool
Procedure	Follow this procedure: 1.Soak the cotton wool in the liquid. 2.Press the cotton wool to remove excess liquid. 3. Clean the lens with the cotton wool, clean the lens one time only and discard the cotton wool.

Caution
Do not clean the infrared lens too vigorously. This can damage the anti-reflective coating.

11.Important Notices

To avoid damage to others and yourself, or your device, please read all the below information carefully prior to using this device.

1. Please do not point to the sun and other high-intensity radiation source directly.
2. The device should be used under the required working temperature.
3. Do not touch the lens with your hands or other objects.
4. Do not touch the device with wet hands.
5. Do not wipe and clean your device with diluent.
6. Please do not wrongly connect the accessory cables to avoid damage to the device.
7. Please take care to avoid static electricity.
8. Please do not disassemble the device. If there is any problem, please contact our company for professional maintenance.

12.Support and Service

12.1 Technical Support

System training can be carried out for users' technical staff and operators.

12.2 After-sales Services

P series handheld thermal cameras are developed by our company, which are guaranteed for good after-sales service. If you have any request, please contact us.

13.Company Information

IRay Technology Co., Ltd.

Website：www.infiray.com

Tel：86-0535-3410623

Fax：86-0535-3410610

Mail：sales@iraytek.com

Add：No.11 Guiyang Street, YEDA, Yantai, Shandong Province, P.R. China.

Appendix: Emissivity of Common Materials

Material	Emissivity
Human Skin	0.98
Printed Circuit Board	0.91
Cement Concrete	0.92
Ceramics	0.92
Rubber	0.95
Wood	0.90
Pitch	0.96
Brick	0.93
Sand	0.90
Soil	0.92
Cardboard	0.90
White Sticky Membrane Paper	0.93
Water	0.96
Snow	0.85
Marble	0.94
Polished Glass	0.94
AAO	0.55
Oxidized Iron	0.64
Oxidized Steel	0.79
Oxidized Stainless Steel	0.85

Worth comes from Service

Technical Support Hotline：

400-883-0800

24h Hotline:

400-998-3088

Customized Services